T 1 - 2 = 457,0 mm

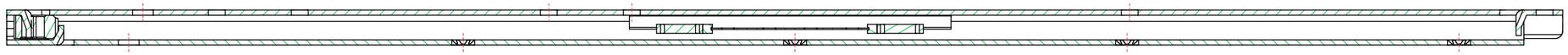

A-A

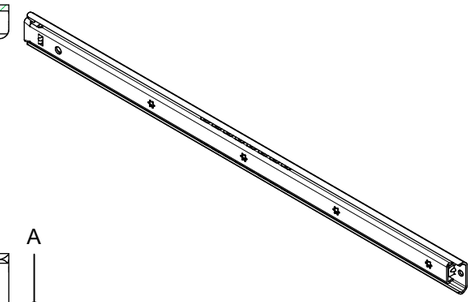

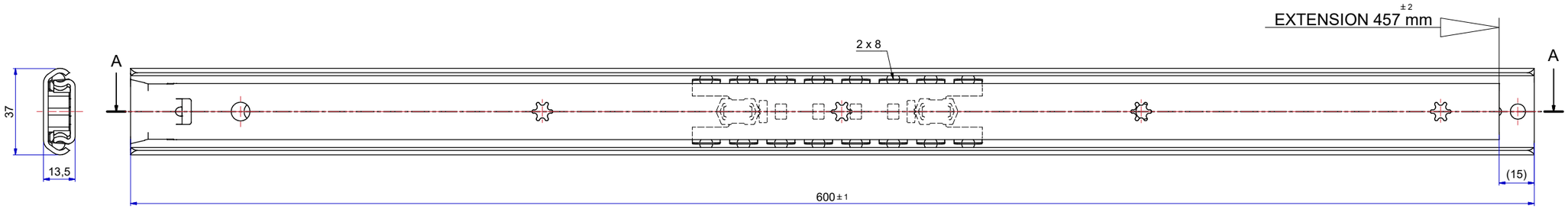


FRONT

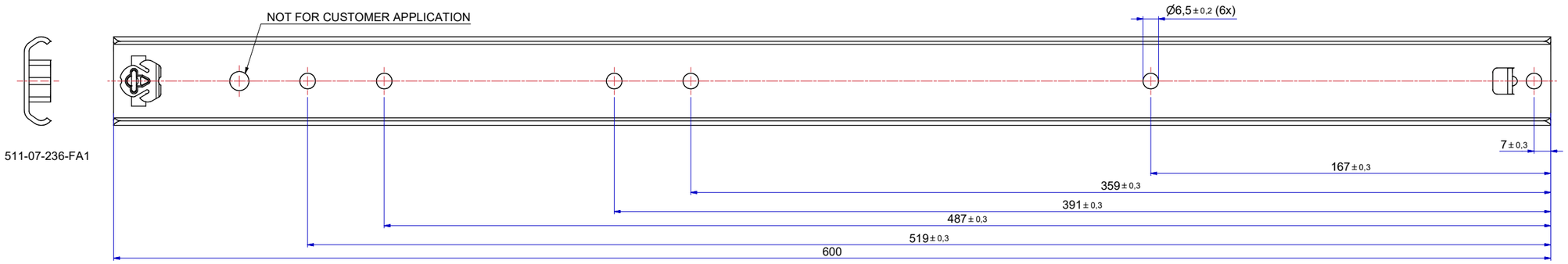


511-07-236-FA1

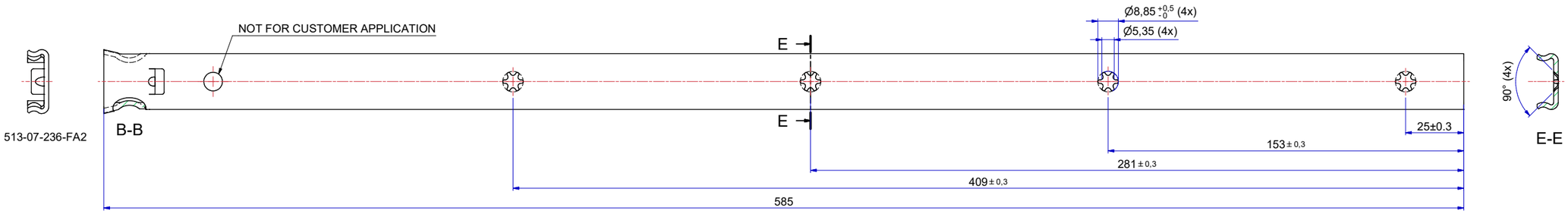


513-07-236-FA2

B-B

E-E

Right hand slide = Left hand slide.

Dimensions between marks are guide dimensions.

Thomas Regout Int. B.V. reserves the right to alter non-customer specific specifications without notice.

# Released for Production

| Rev | Date | Description | Designer |
|---|---|---|---|
| 01 | 2-8-2023 | CONVERTED TO INVENTOR | R.G |
| 01 | 13-01-11 | TEK. IN PRO/E GEZET. BOORGATEN VERVANGEN DOOR KRUISGATEN IN FA2 PROFIEL. | ML |

| | | | | | |
|---|---|---|---|---|---|
| Designer Jan Bastings | Gen.Tol.Dim. ± 0.5 | Third angle projection | Material | | |
| Date 11-8-1994 | Gen.Tol.Angle ± 0,5 | | Treatment | | |
| Approver | Gen.Rougness Ra | | Draw type Fabrication | Doc.No. | E000152525 |
| Date | Units mm/deg. | | Scale 1 : 1 | Type / Model No. | E000152532 |

Description
FINN 600.0 / 457.0 (13,5mm)
Released for Production

| Format | | Item No. | Revision |
|---|---|---|---|
| A1 | THOMAS REGOUT INTERNATIONAL B.V. | 107-236 | 01 |

© THOMAS REGOUT INTERNATIONAL BV, Industrieweg 40, 6219 NR, Maastricht, The Netherlands, +31 (0)43 351 66 66 All rights are reserved.