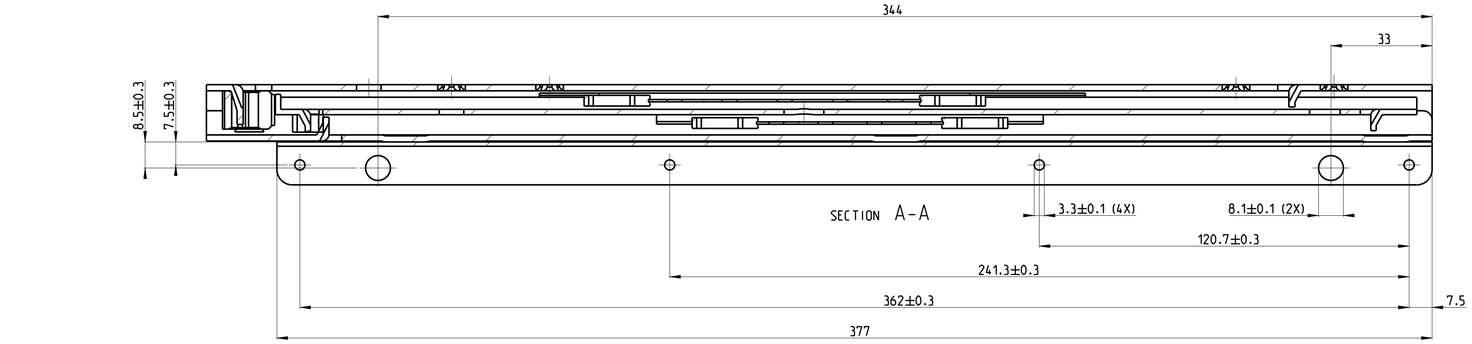

T 1-2 = 198.0
T 2-3 = 237.0

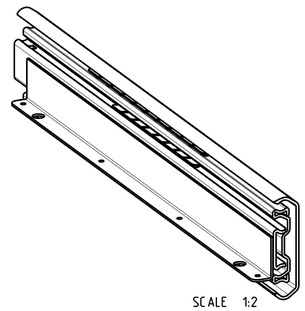

SCALE 1:2

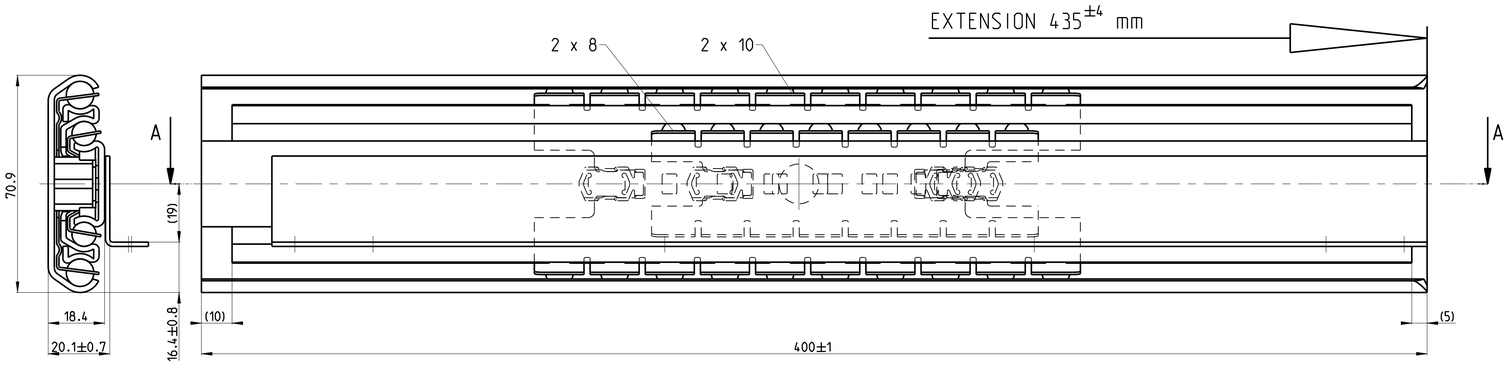

FRONT

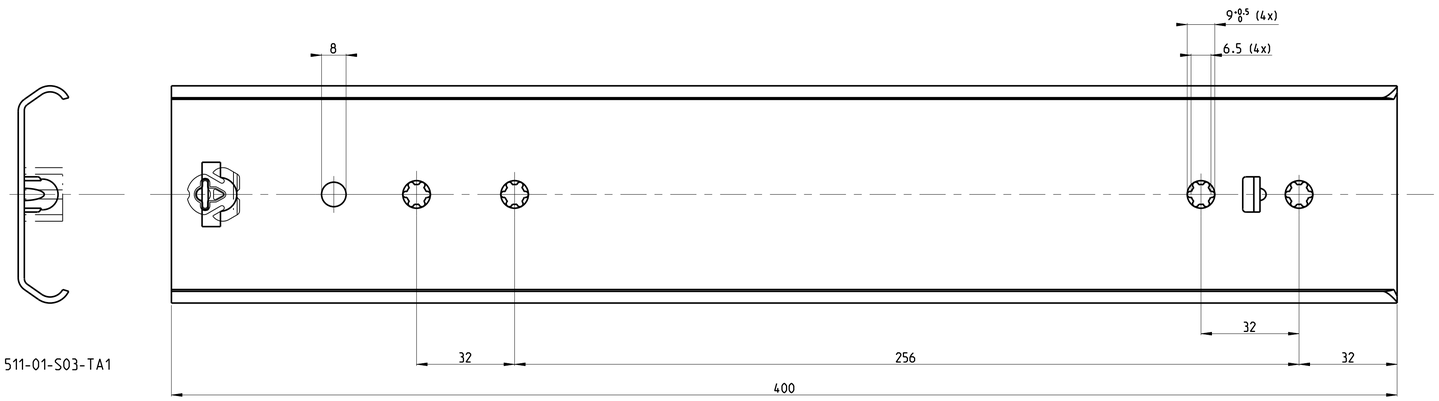

511-01-S03-TA1

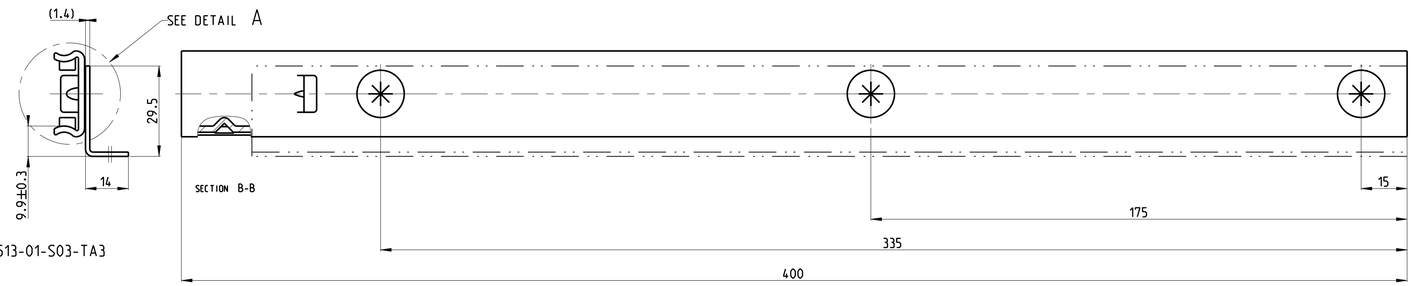

513-01-S03-TA3

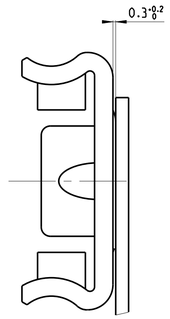

DETAIL A
SCALE 3:1

04	-	-	-	-	05	-	-	-	-	06	-	-	-	-
01	-	-	-	-	02	-	-	-	-	03	-	-	-	-

PRO/ENGINEER Drawing Was: -	Dimensions between marks are guide dimensions. Tolerances unless otherwise stated ±0.5mm.		Thomas Regout Int. B.V. reserves the right to alter non-customer specific specifications without notice.
American projection	DIMENSION	mm	MAT.: -
	SCALE	1:1	REM.: RIGHT HAND SLIDE IS SHOWN PART
	DATE	12-09-2011	LEFT HAND SLIDE IS OPPOSITE PART
	DESIGNER	R. Groen	-
	CHECKED	-	TYPE B

TITAN 400.0 / 435.0 (18.5mm)

THOMAS REGOUT INTERNATIONAL BV

Drw. Nr. 101-S03 _ 00 Production

Format. A1

© Thomas Regout International BV All rights are reserved.